HORMEN CE a.s.
Moulíkova 3286/1b
150 00 Praha 5
IČO: 27154742
DIČ: CZ27154742
www.hormen.cz

GONNGO LED

series: GONNGO

LED Led lights

IP 20 IP 20

Surface mounted

Ø 370 × 86 mm

Suspended or surface mounted LED luminaires
Body made of steel sheet, powder coated
Diffuser made of satinic or microprismatic plexi for soft light diffusion
Electronic or dimmable electronic ballast
Accessories to be ordered separately

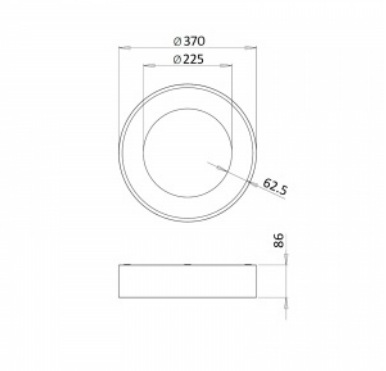

Product description

Product code **0-172111.000**	Driver **EVG**
Optics **acrylic satin diffuser**	Colour **white**
Ø **370 mm**	Dimension c **86 mm**
Type of light source **LED**	Total power consumption **14 W**
Luminous flux **2112 lm**	Color temperatiure **4000 K**
Color index (RA) **80**	Mounting type **surface mounted, suspended**
Cover **IP 20**	Weight **3.5 kg**

Photometry

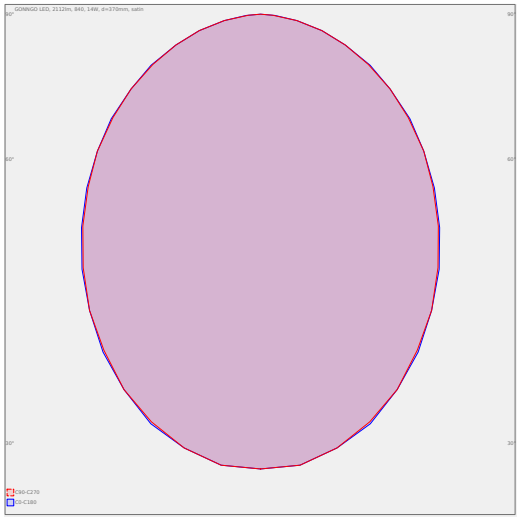

Copyright 2018 HORMEN CE a. s.